# AUTOMATIC AND CONCEALABLE FIREARMS DESIGN BOOK, VOLUME I

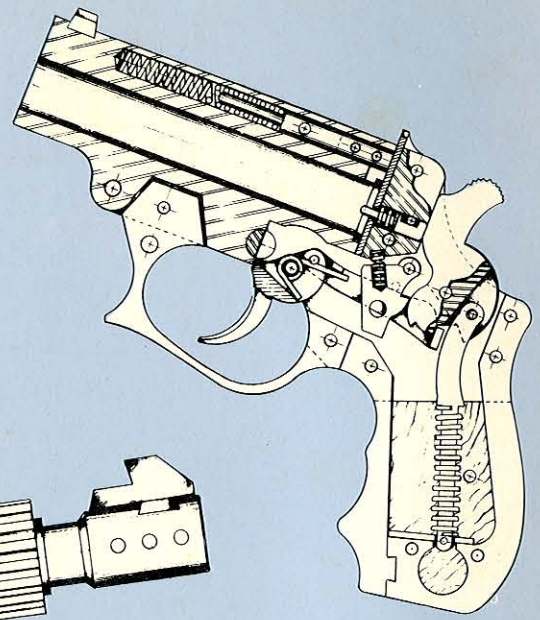

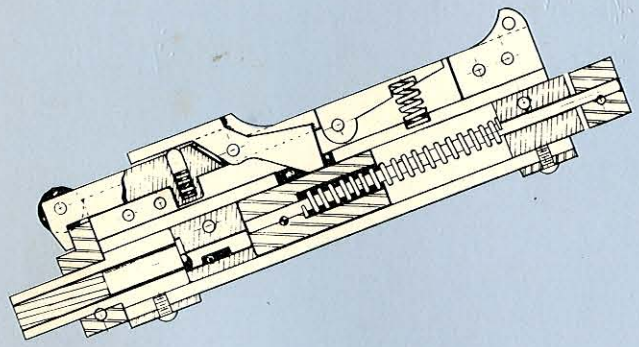

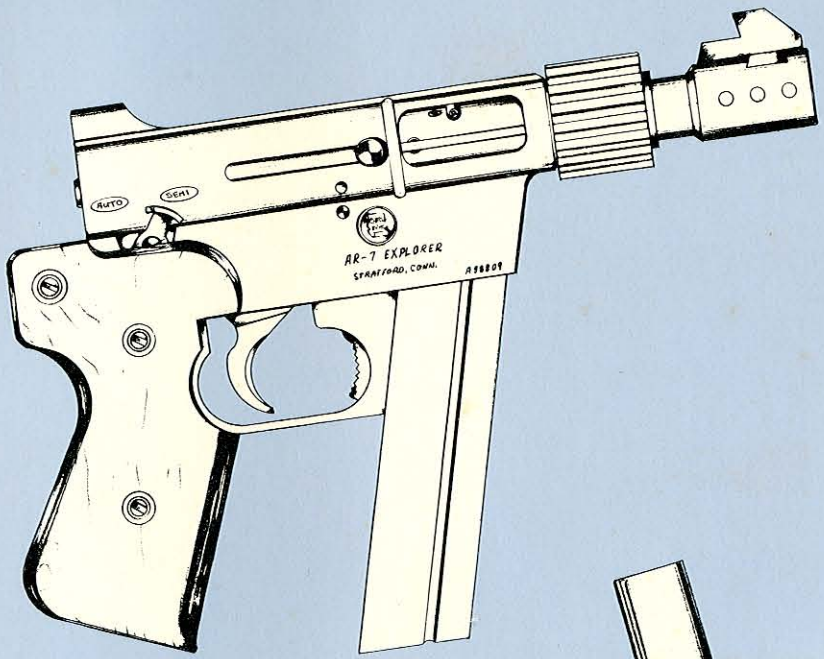


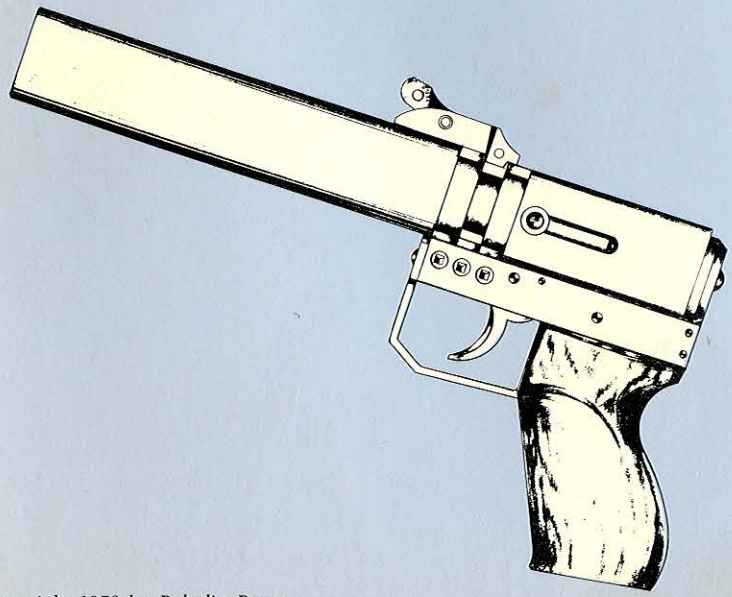

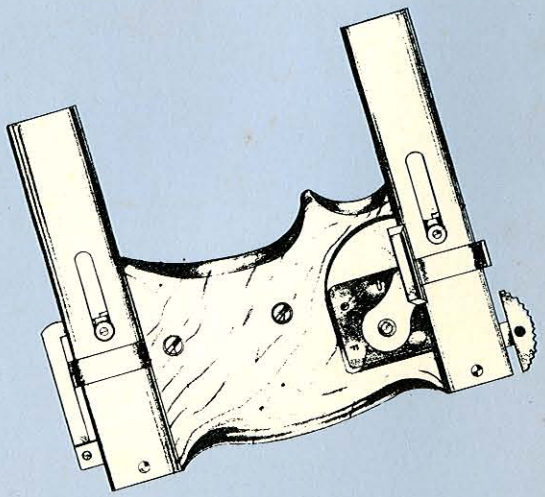

© Copyright 1979 by Paladin Press

# Automatic & Concealable Firearms Design Book, Volume I

# Automatic & Concealable Firearms Design Book, Volume I

by the Editors of Paladin Press books

*Automatic and Concealable Firearms Design Book, Volume I*
Copyright 1979 by Paladin Press

ISBN 0-87364-165-5
Printed in the United States of America

All rights reserved. Except for use in a review, no portion of this book may be reproduced in any form without the express written permission of the publisher and the author. Direct all inquiries and/or orders to the address listed below.

Published by Paladin Press, a division of
Paladin Enterprises, Inc., P.O. Box 1307,
Boulder, Colorado 80306 (303) 443-7250

Neither the author nor the publisher assumes any responsibility for the use or misuse of the information contained in this book.

# WARNING

It is against the law to manufacture a firearms without an appropriate license from the federal government. There are also state and local laws prohibiting the possession of such weapons in many areas. Severe penalties are prescribed for violations of these laws. Be warned!

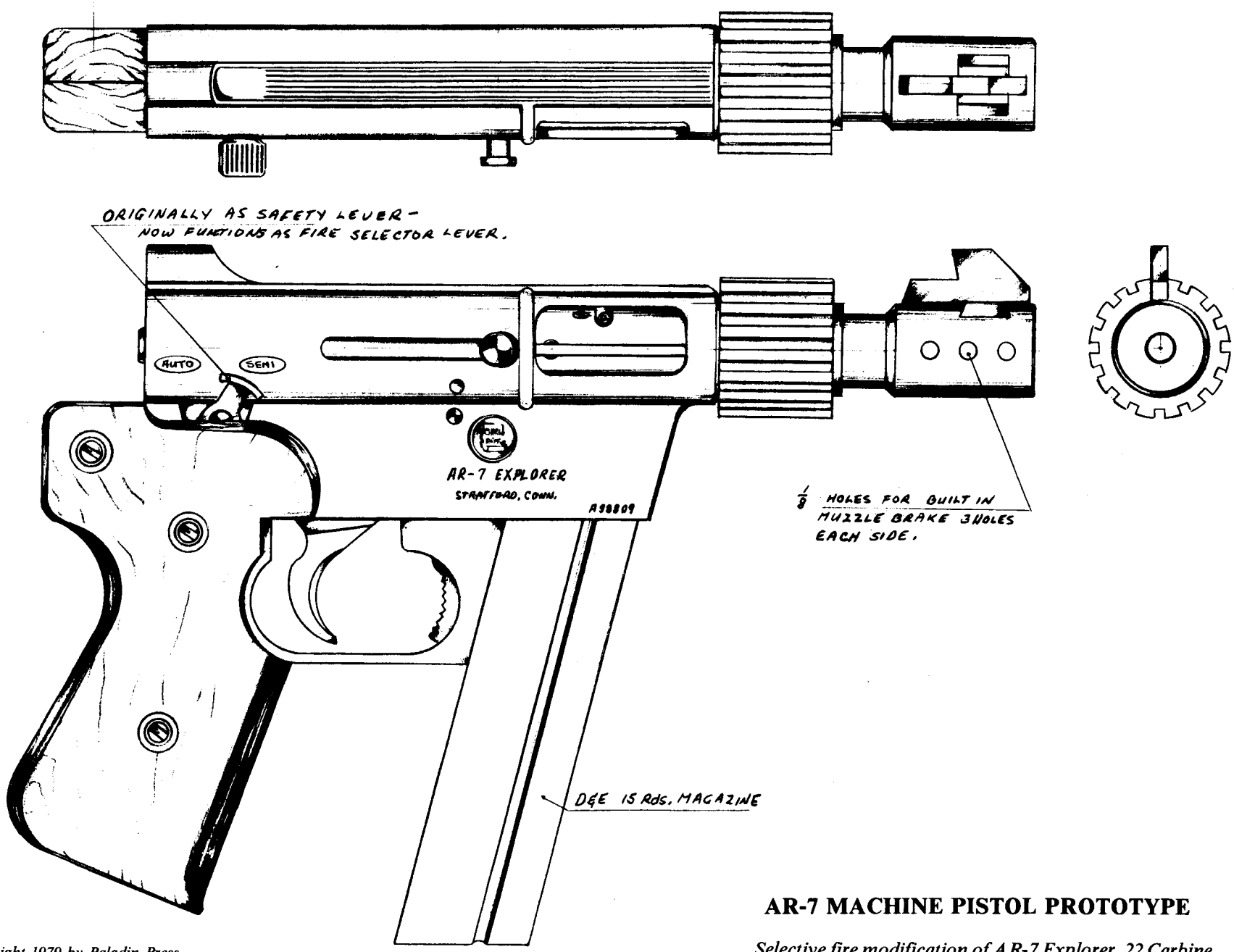


**AR-7 MACHINE PISTOL PROTOTYPE**

*Selective fire modification of AR-7 Explorer .22 Carbine.*

© Copyright 1979 by Paladin Press

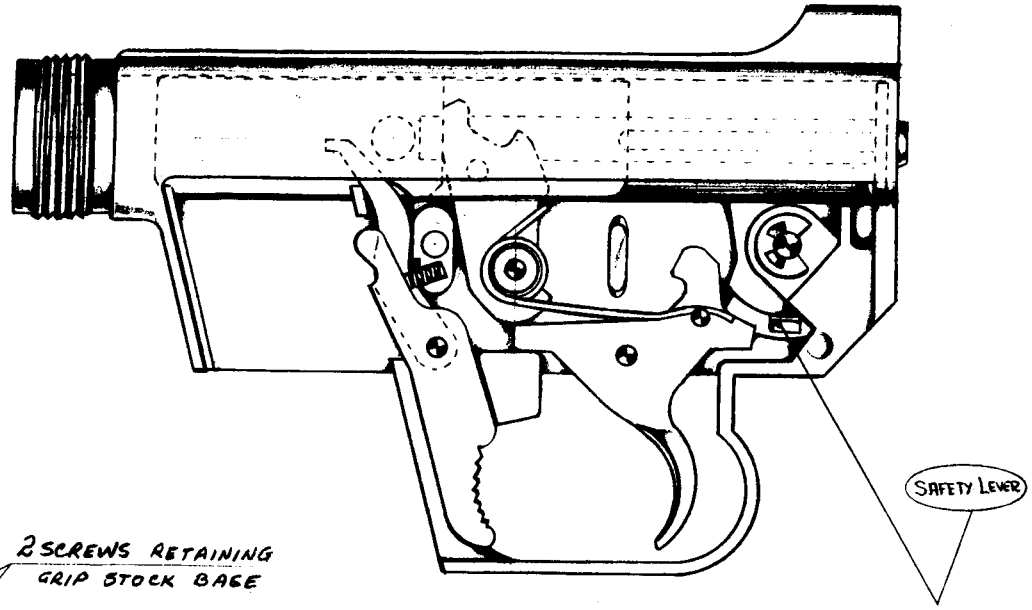


ORIGINAL SEMI-AUTOMATIC
~TRIGGER MECHANISM~

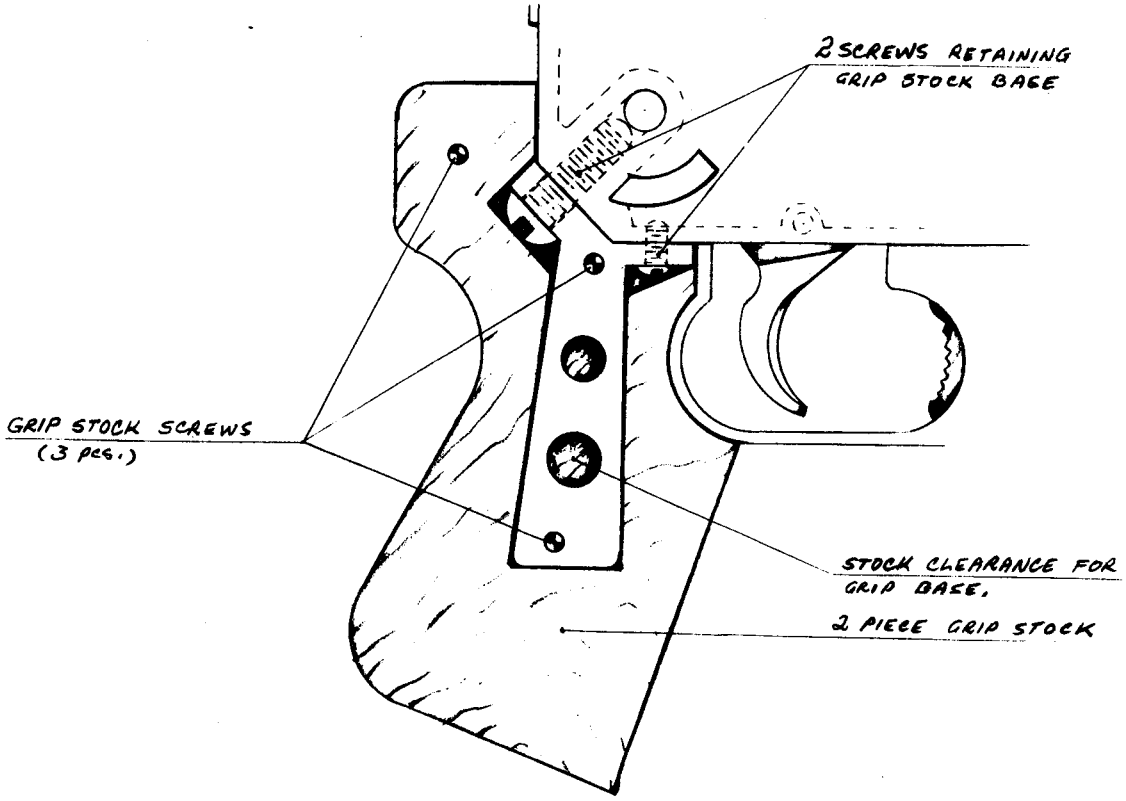


© Copyright 1979 by Paladin Press

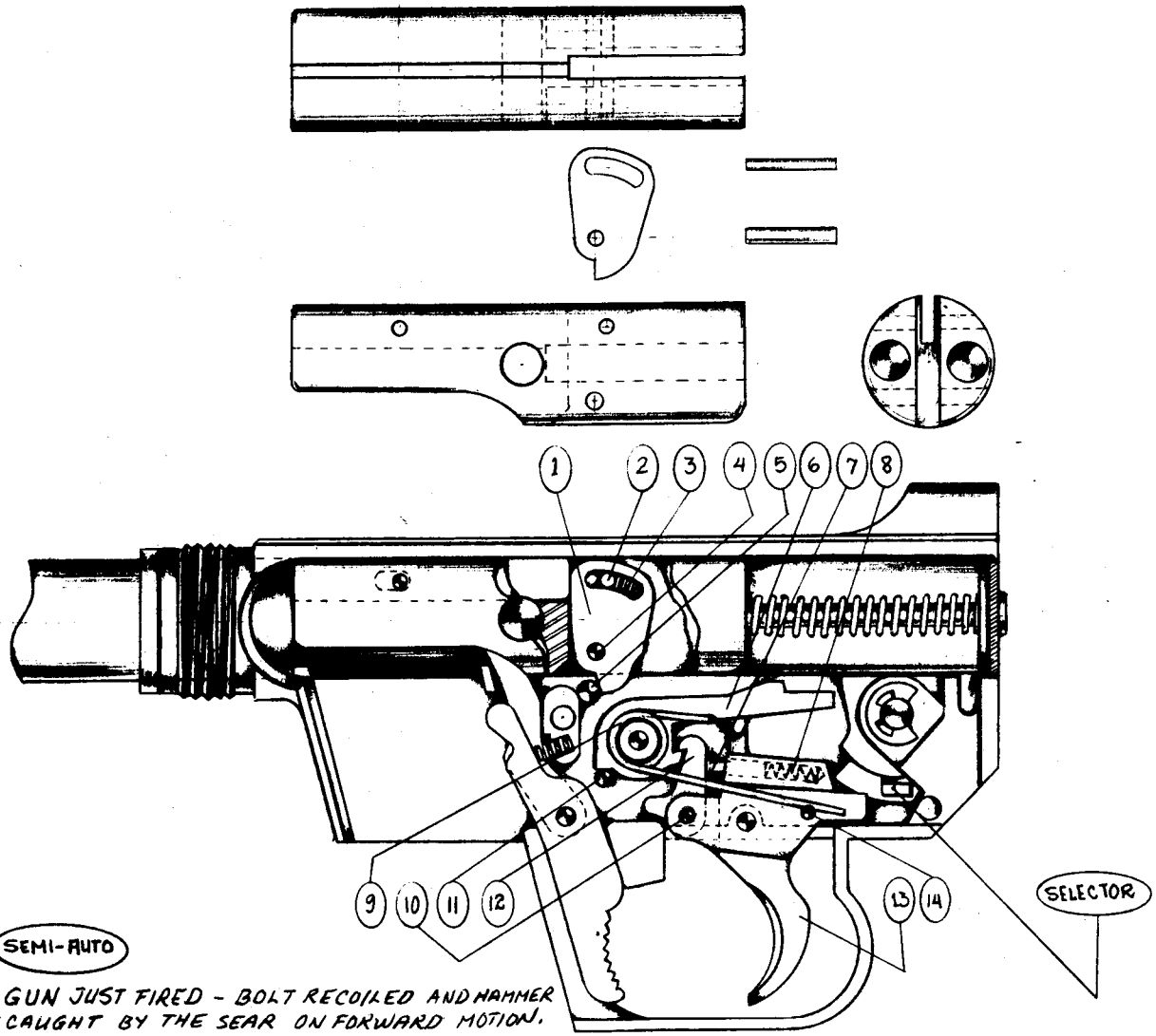


© Copyright 1979 by Paladin Press

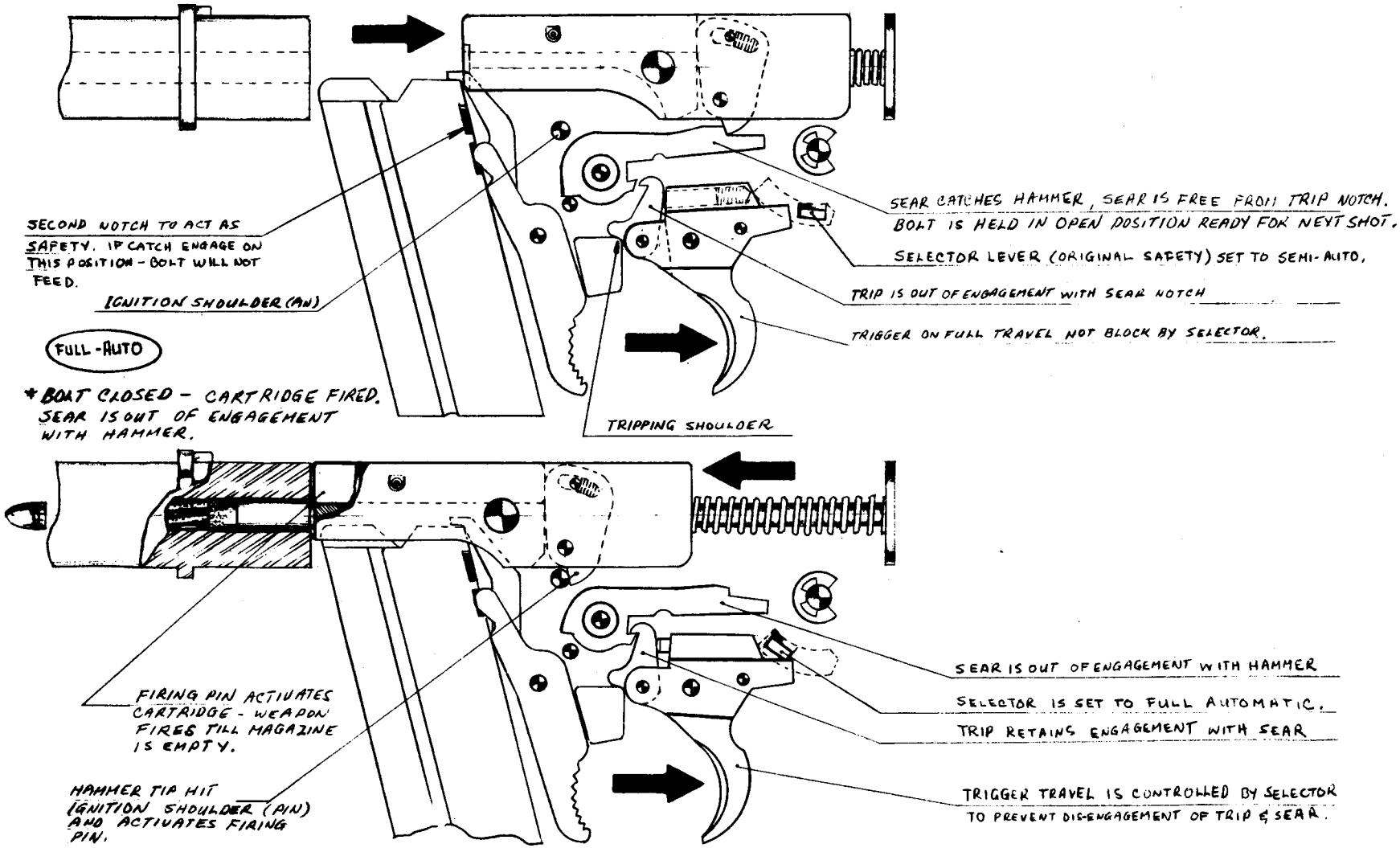


© Copyright 1979 by Paladin Press

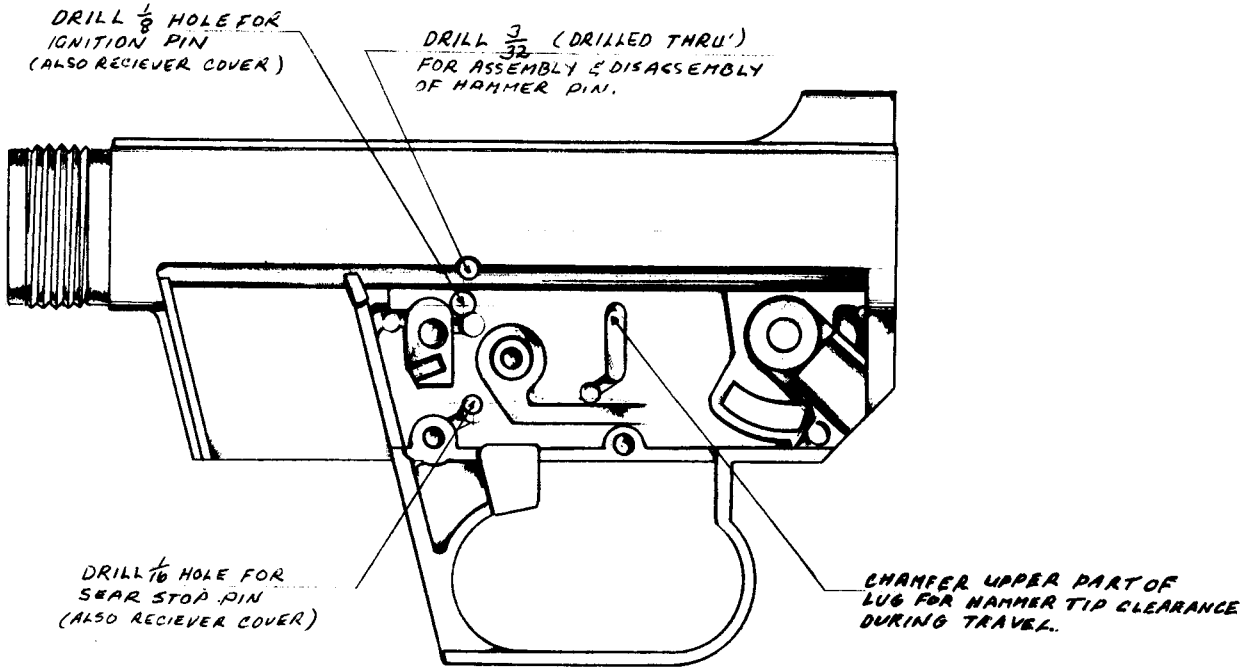


© Copyright 1979 by Paladin Press

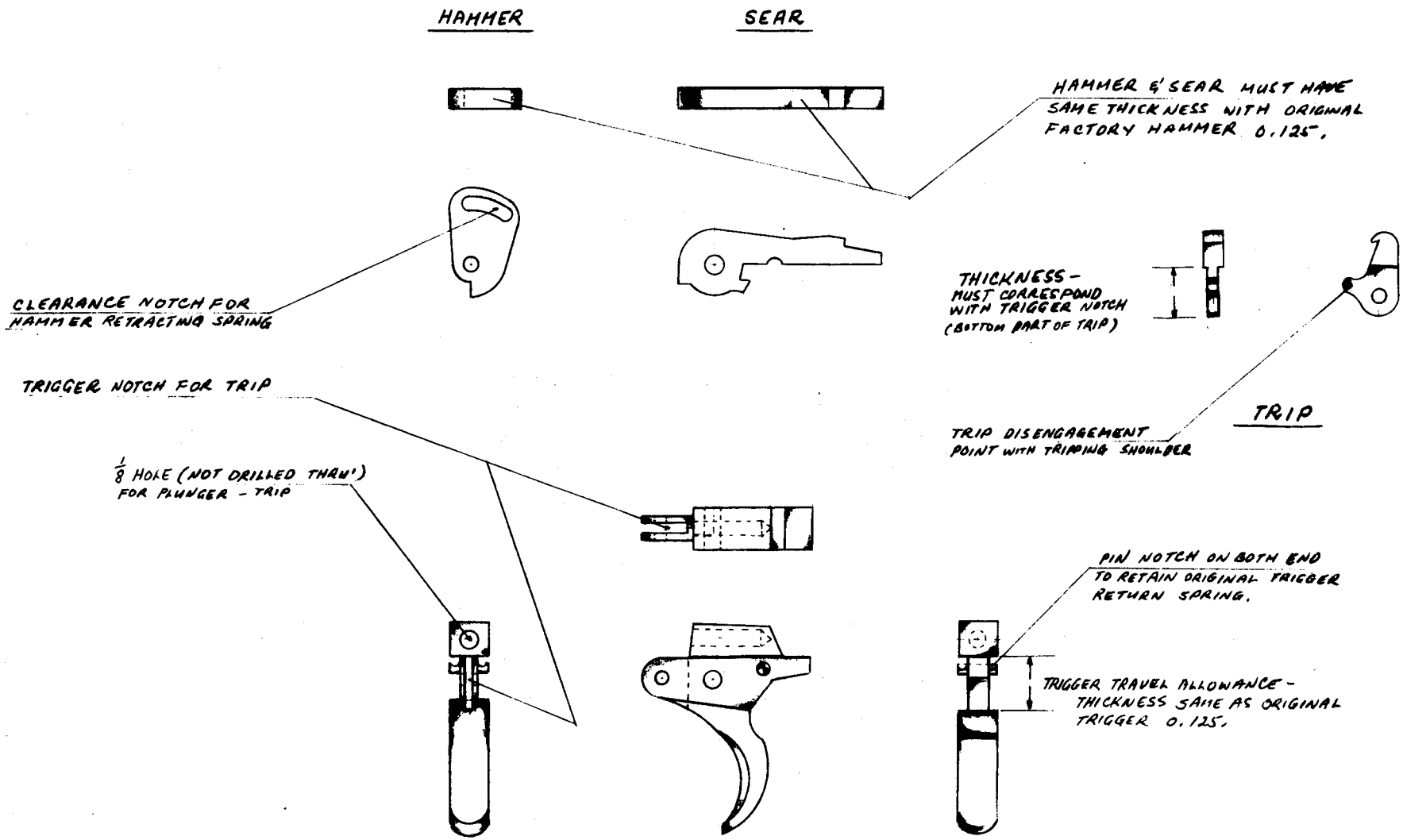


TRIGGER DETAIL

© Copyright 1979 by Paladin Press

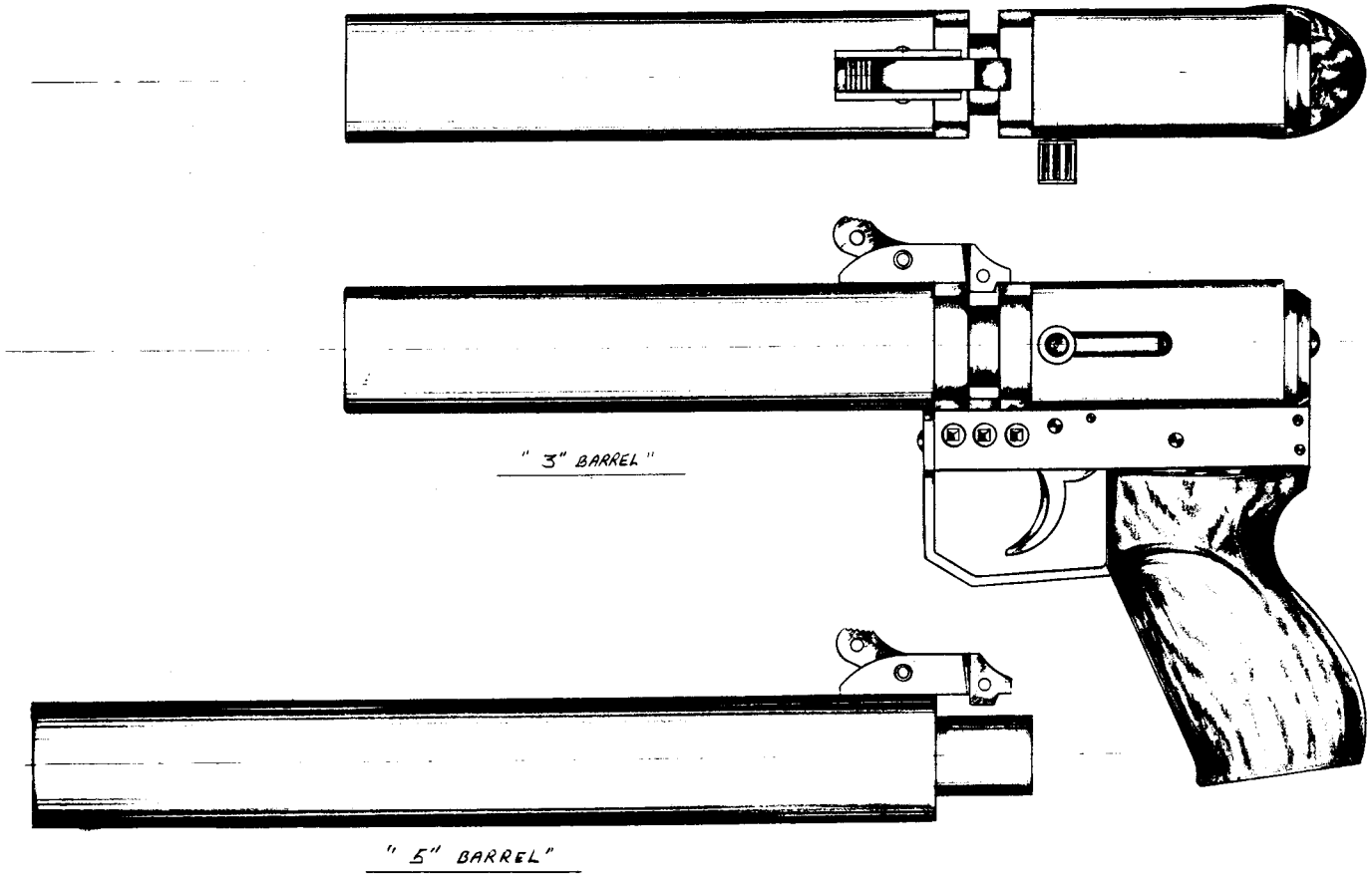


**SPECIAL .22 SILENCED WEAPON**

© *Copyright 1979 by Paladin Press*

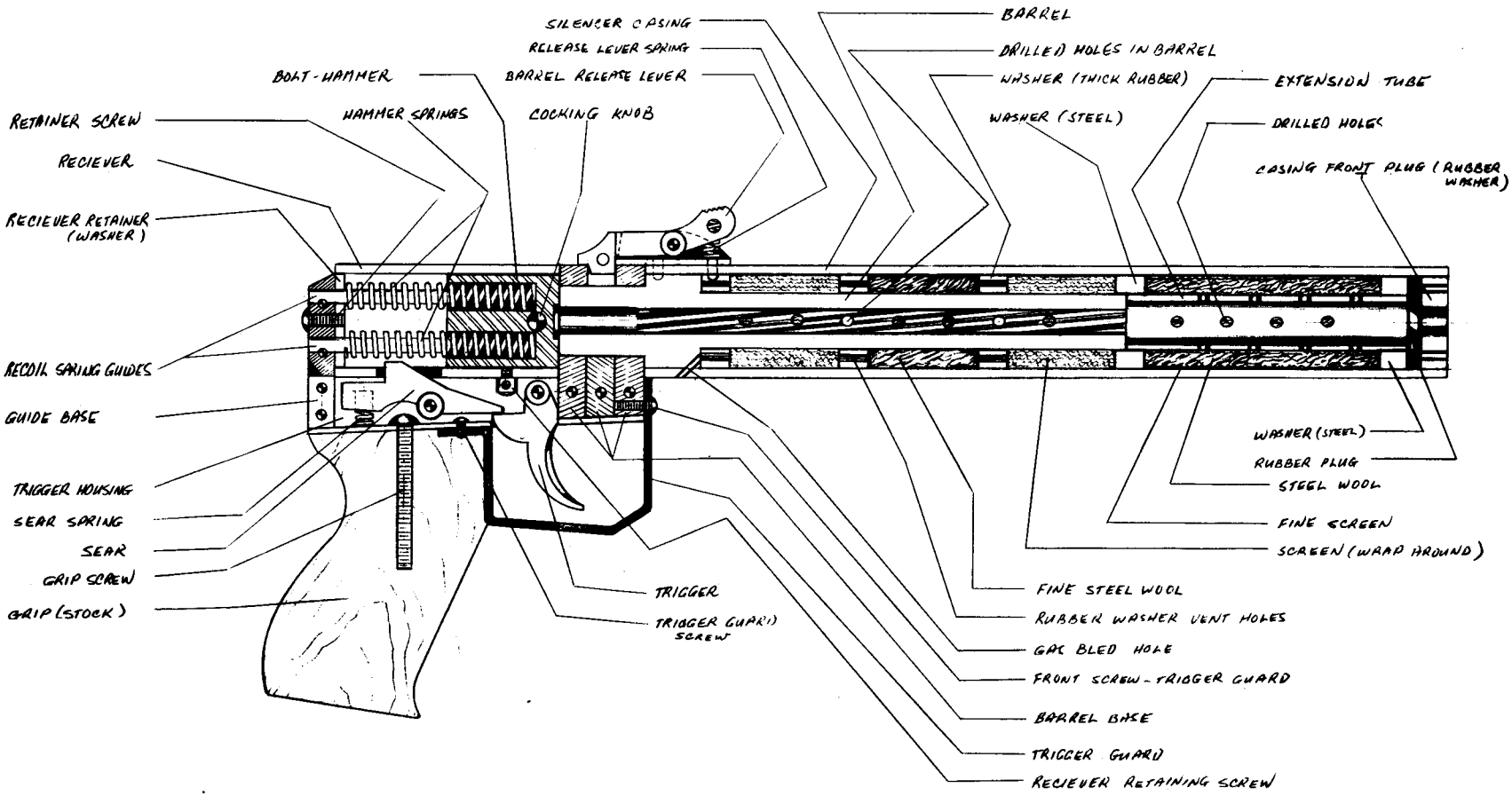


© Copyright 1979 by Paladin Press

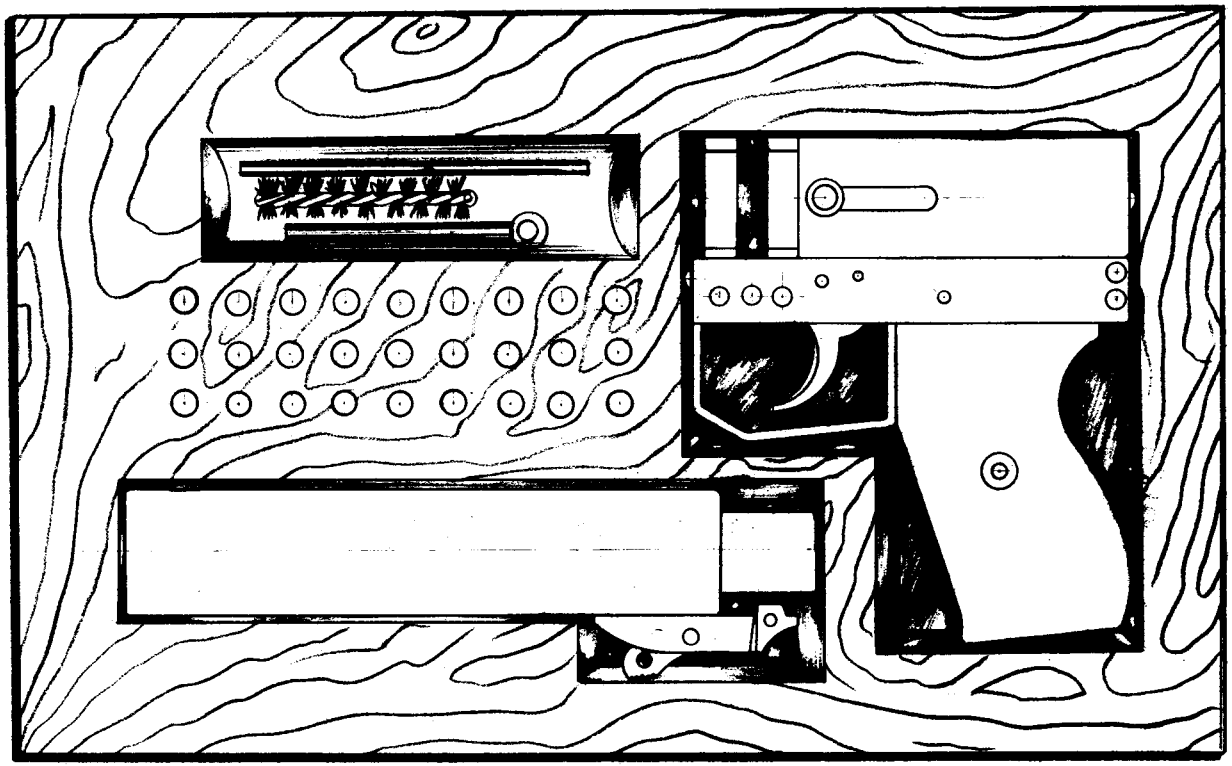

IMPROVISED WOODEN CASE FOR THE
— SPECIAL WEAPON MODEL —

© Copyright 1979 by Paladin Press

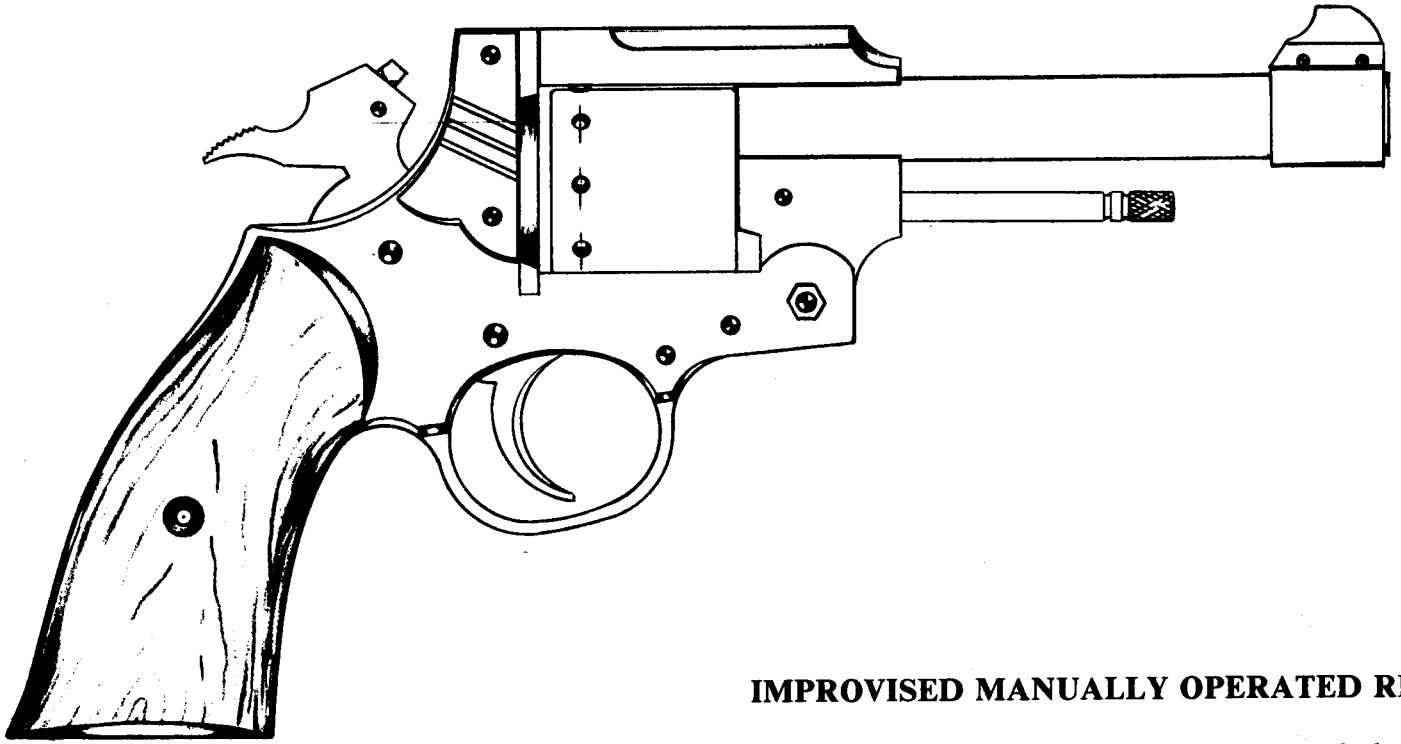

**IMPROVISED MANUALLY OPERATED REVOLVER**

*Cylinder is turned manually after each shot.*

© *Copyright 1979 by Paladin Press*

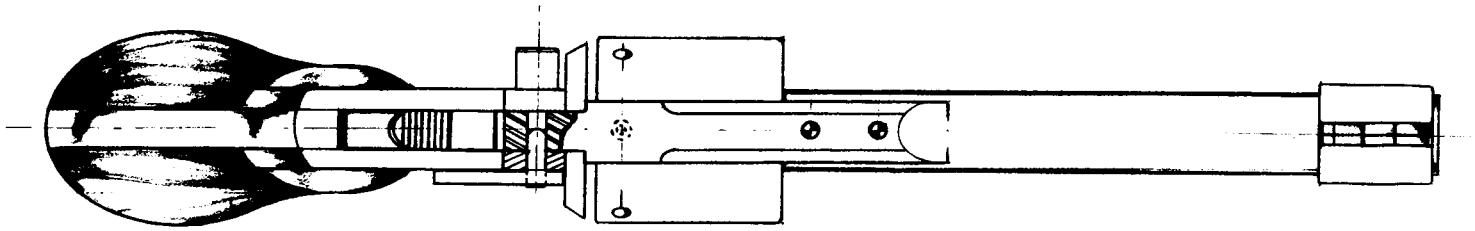

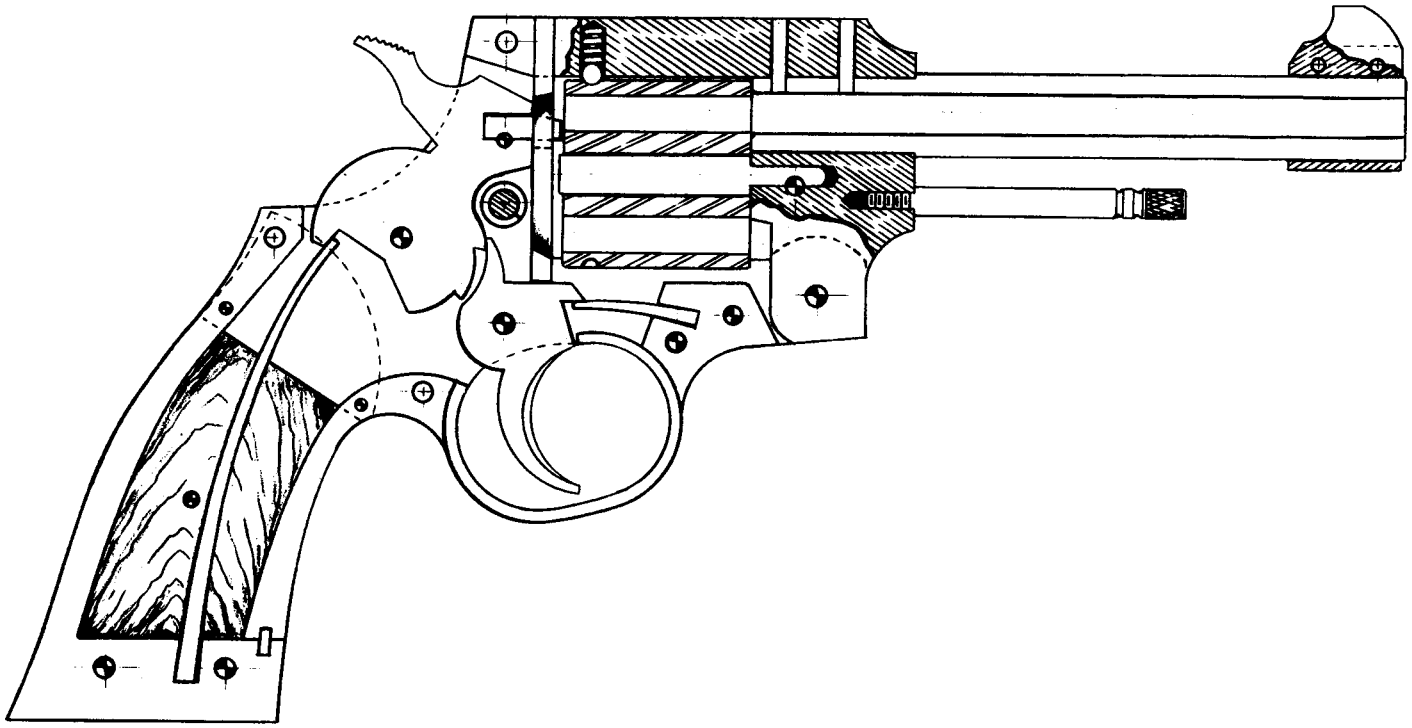

© Copyright 1979 by Paladin Press

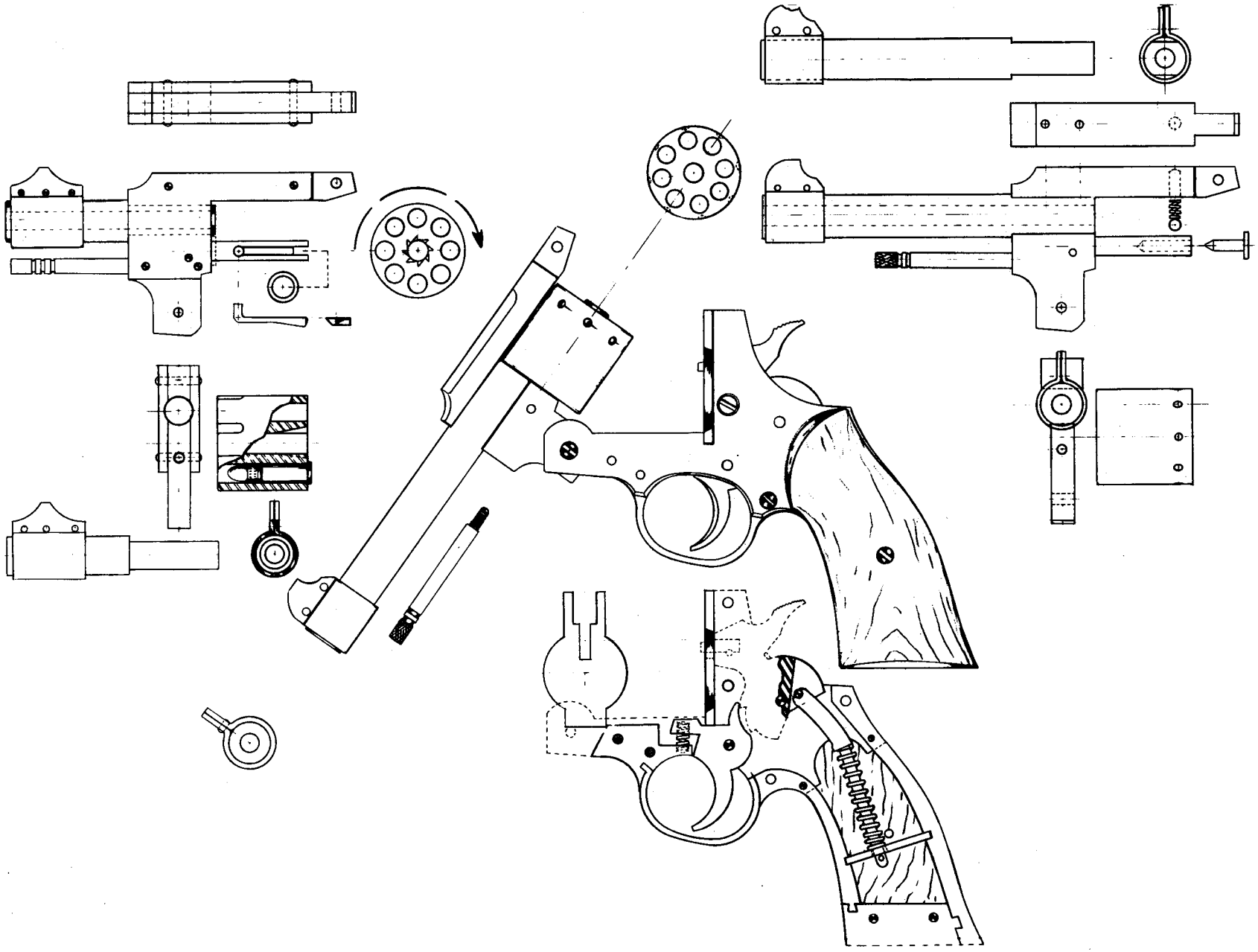

© Copyright 1979 by Paladin Press

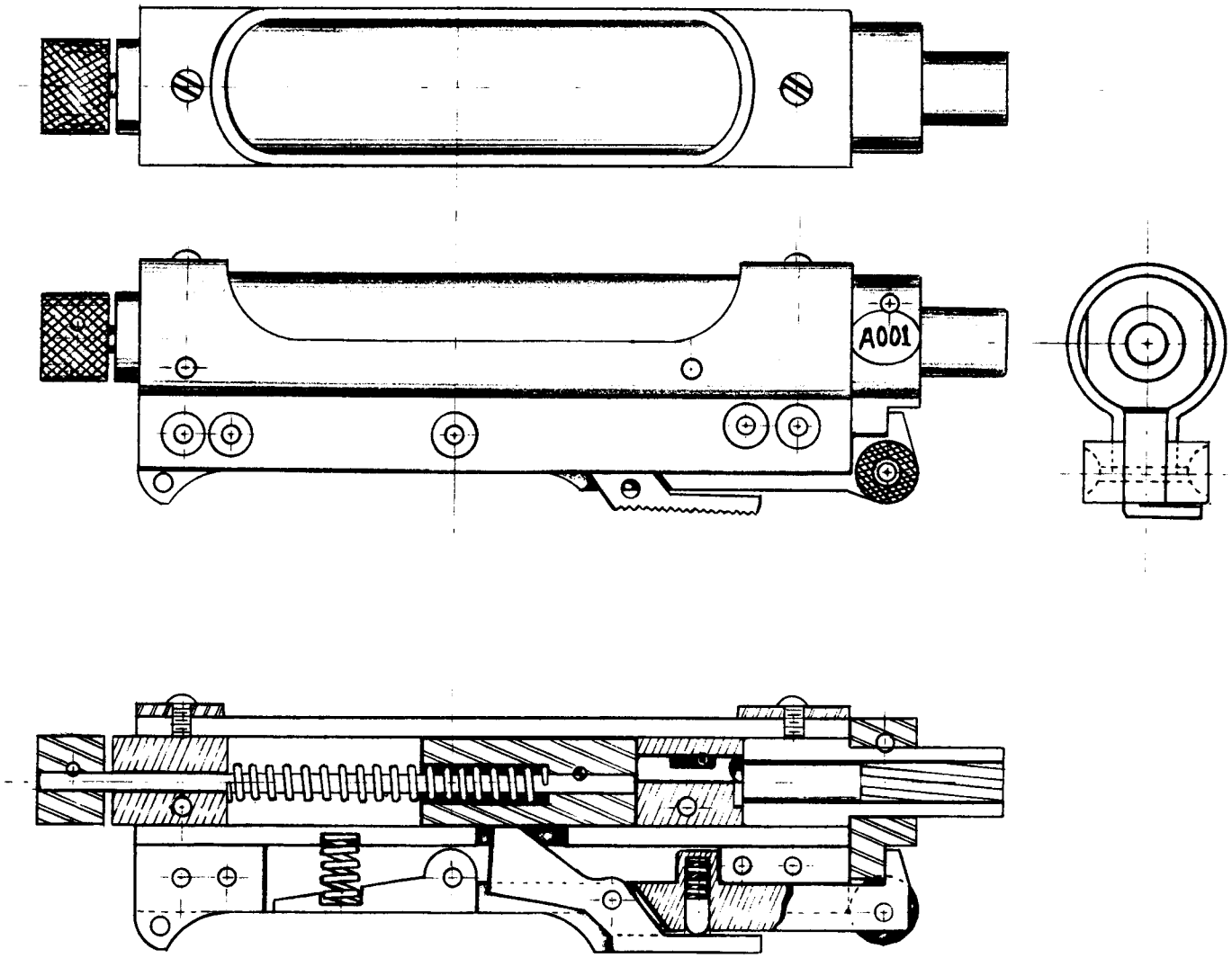


**STINGER — SPECIAL MODEL**

© *Copyright 1979 by Paladin Press*

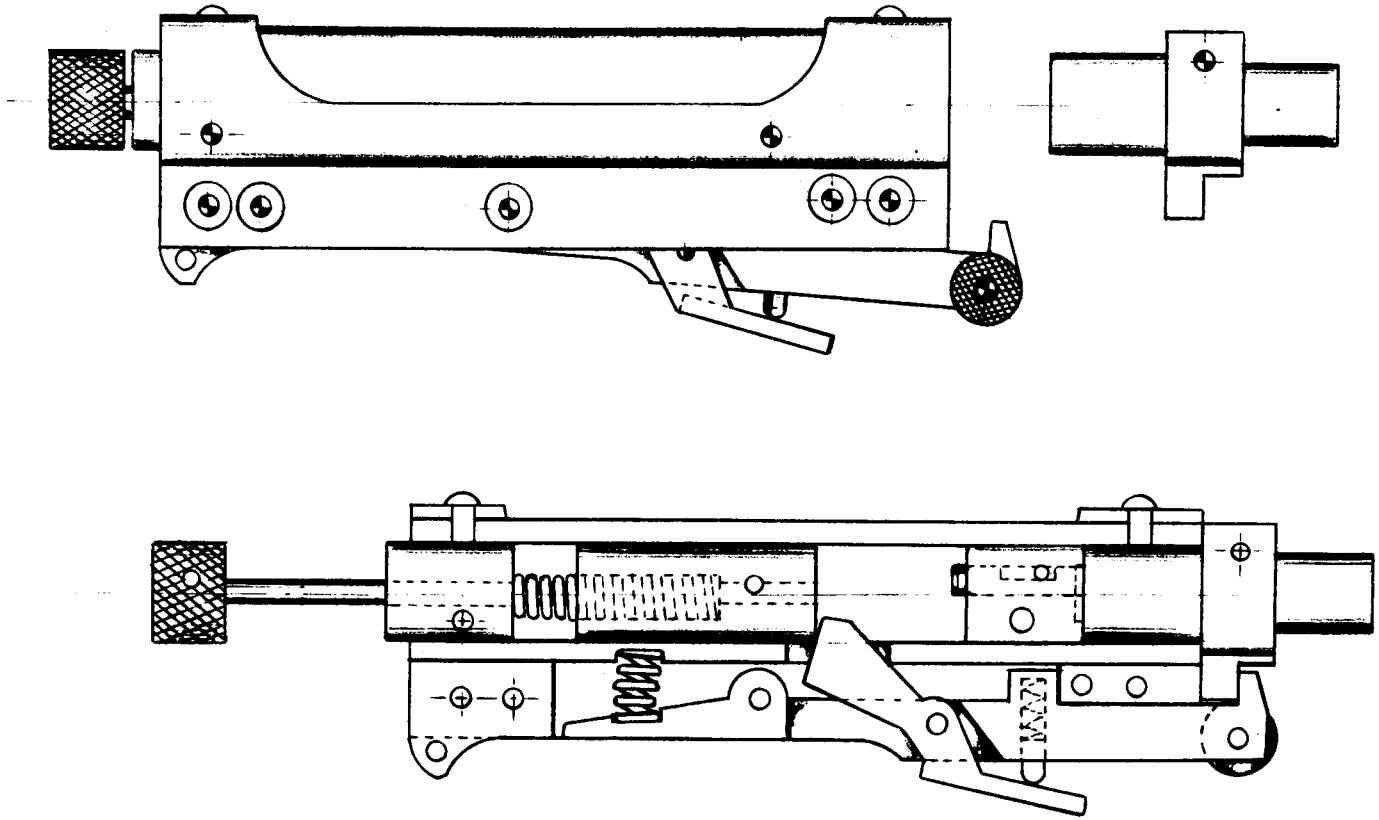

© Copyright 1979 by Paladin Press

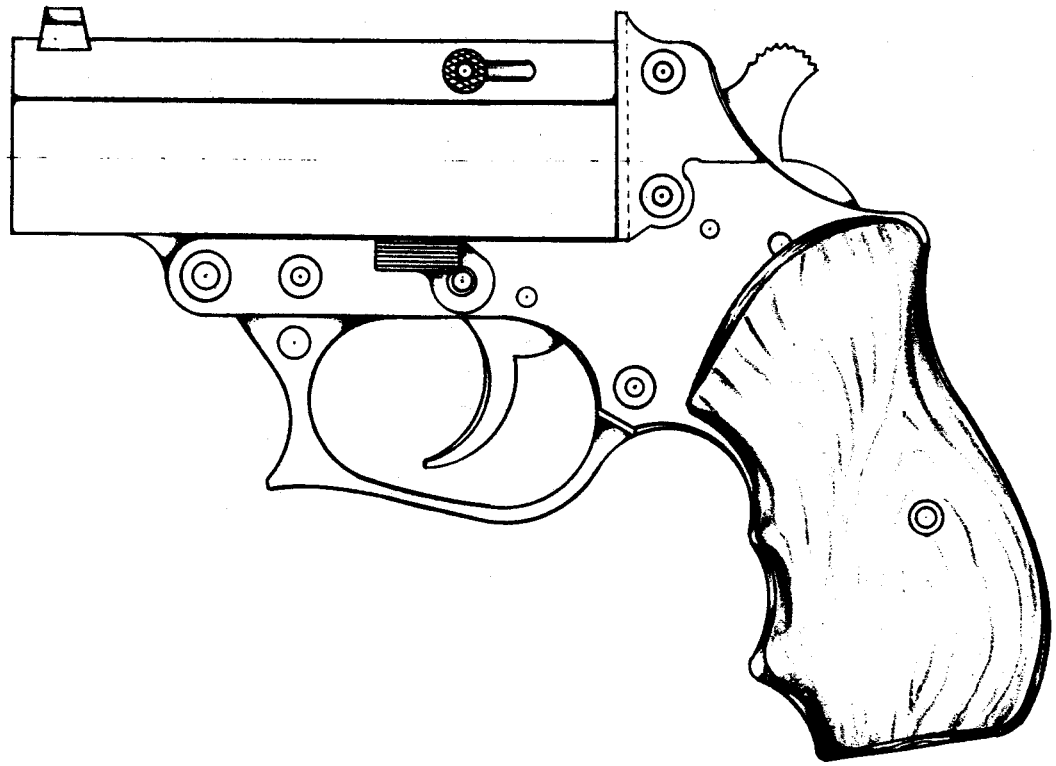

**DOUBLE ACTION MINI-SHOTGUN PISTOL**

*Made in .410 gauge and .45 ACP*

© *Copyright 1979 by Paladin Press*

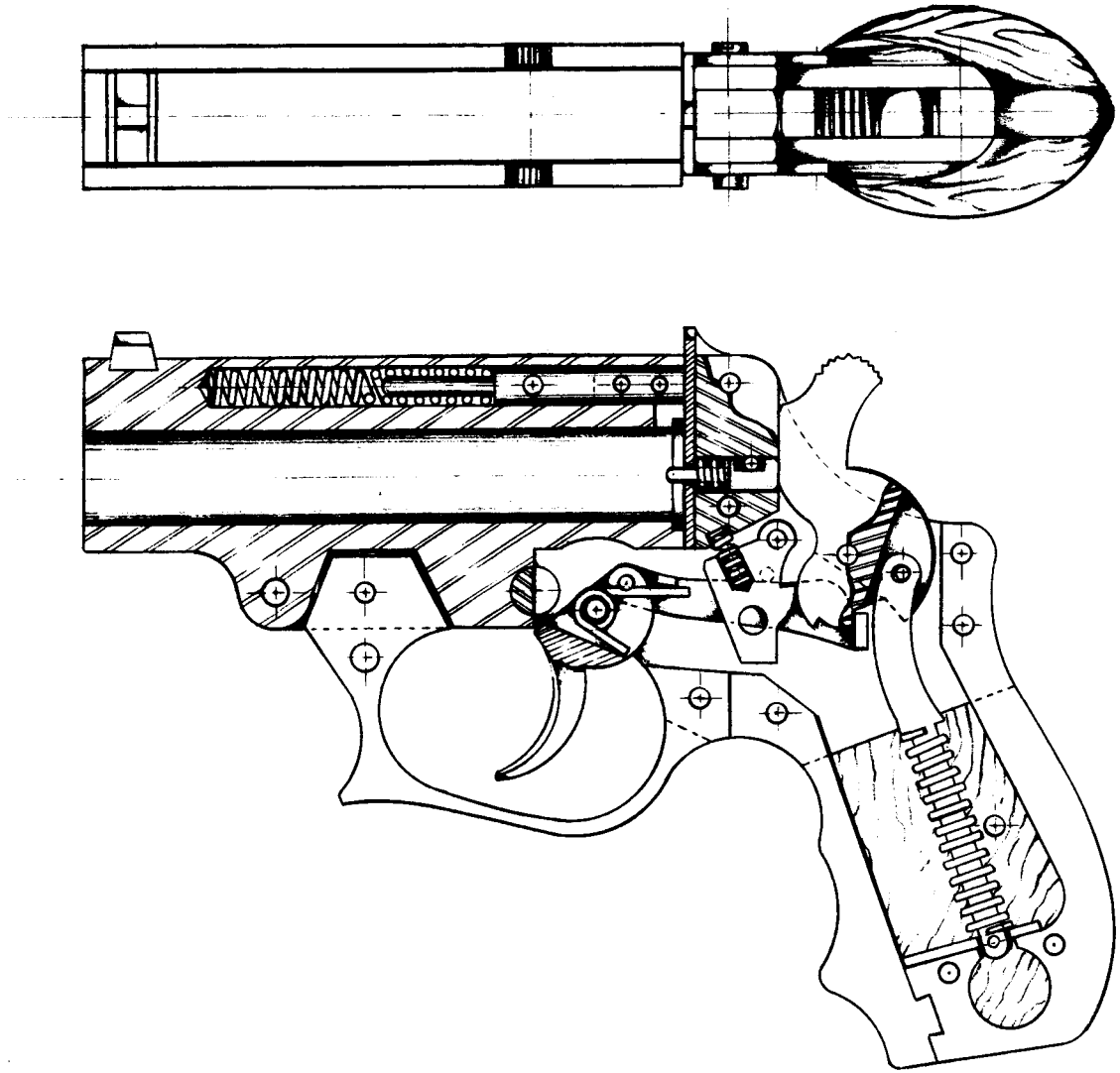

© Copyright 1979 by Paladin Press

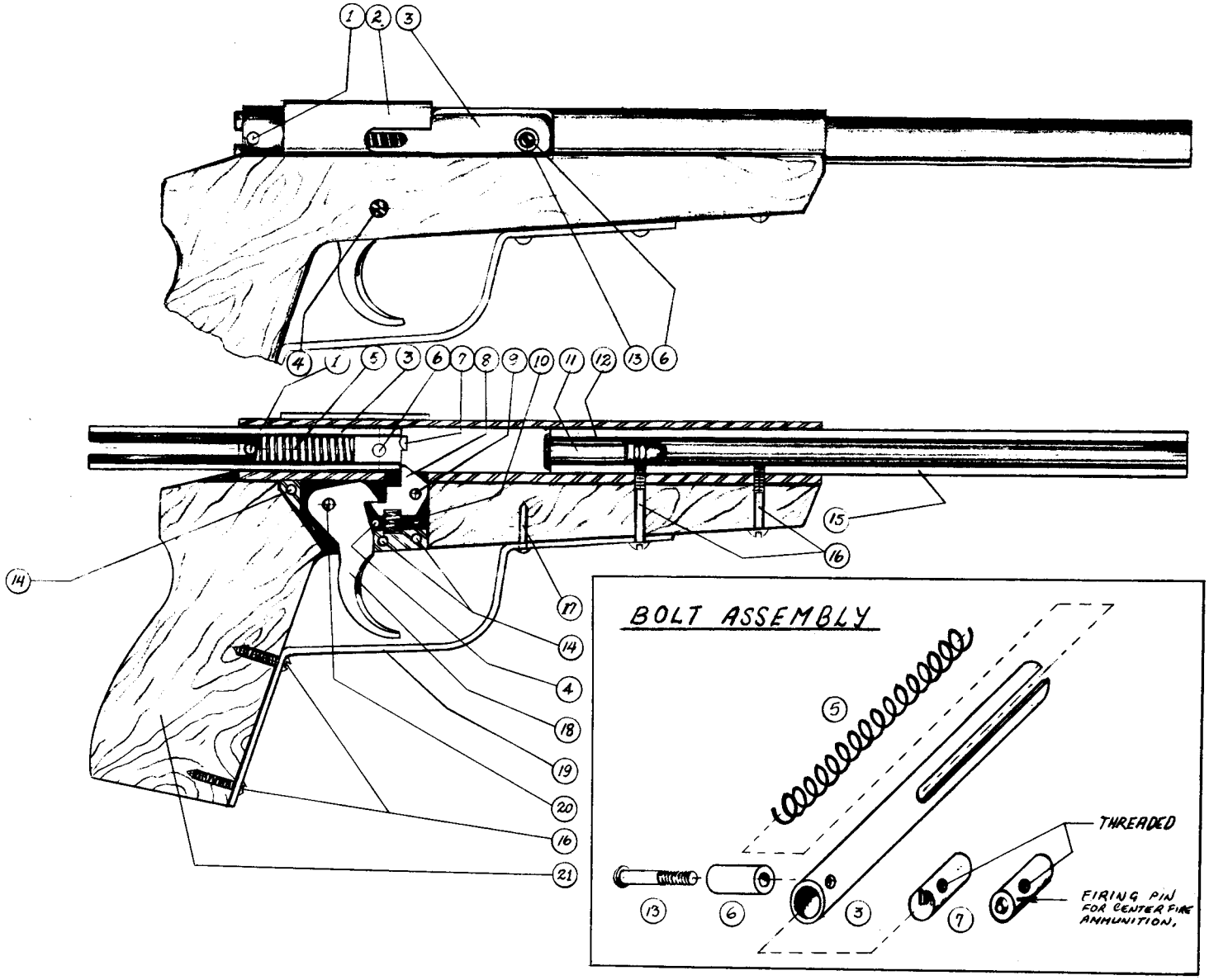


**IMPROVISED BOLT ACTION .22**

© Copyright 1979 by Paladin Press

**BOLT ACTION .22**
**PARTS LIST**

1. *Hammer spring stop pin*
2. *Barrel reinforcement jacket*
3. *Bolt containing firing pin assembly*
4. *Trigger housing screw*
5. *Hammer spring*
6. *Cocking handle screw*
7. *Firing pin*
8. *Sear*
9. *Sear pin*
10. *Sear spring*
11. *.22 LR cartridge*
12. *Chamber*
13. *Cocking handle screw*
14. *Trigger housing pins*
15. *Pipe barrel*
16. *Barrel retaining screw*
17. *Nail*
18. *Trigger*
19. *Trigger guard*
20. *Trigger pin*
21. *One piece stock*

***Note:*** *After firing, the weapon will automatically eject the empty shell from chamber. Bolt must be cocked to fire again, after reloading.*

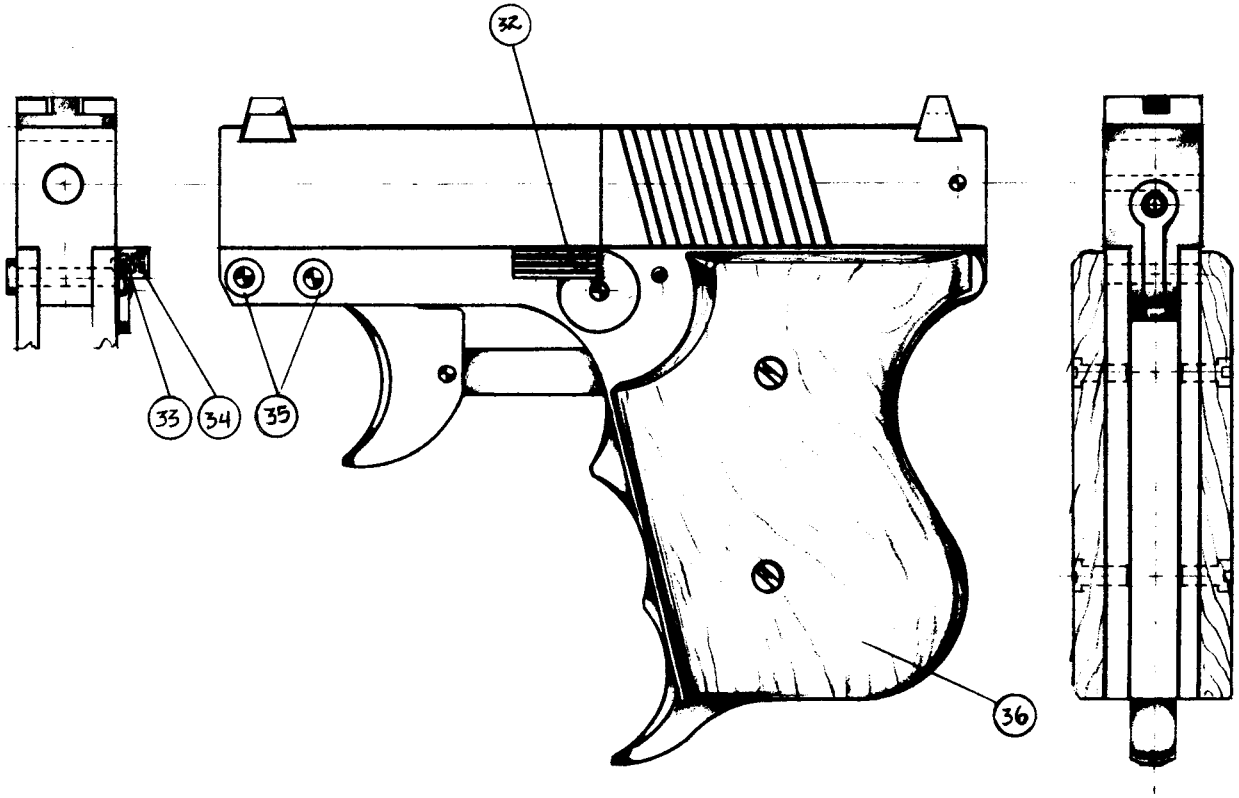


**DOUBLE ACTION SINGLE SHOT .22 MAGNUM**

© *Copyright 1979 by Paladin Press*

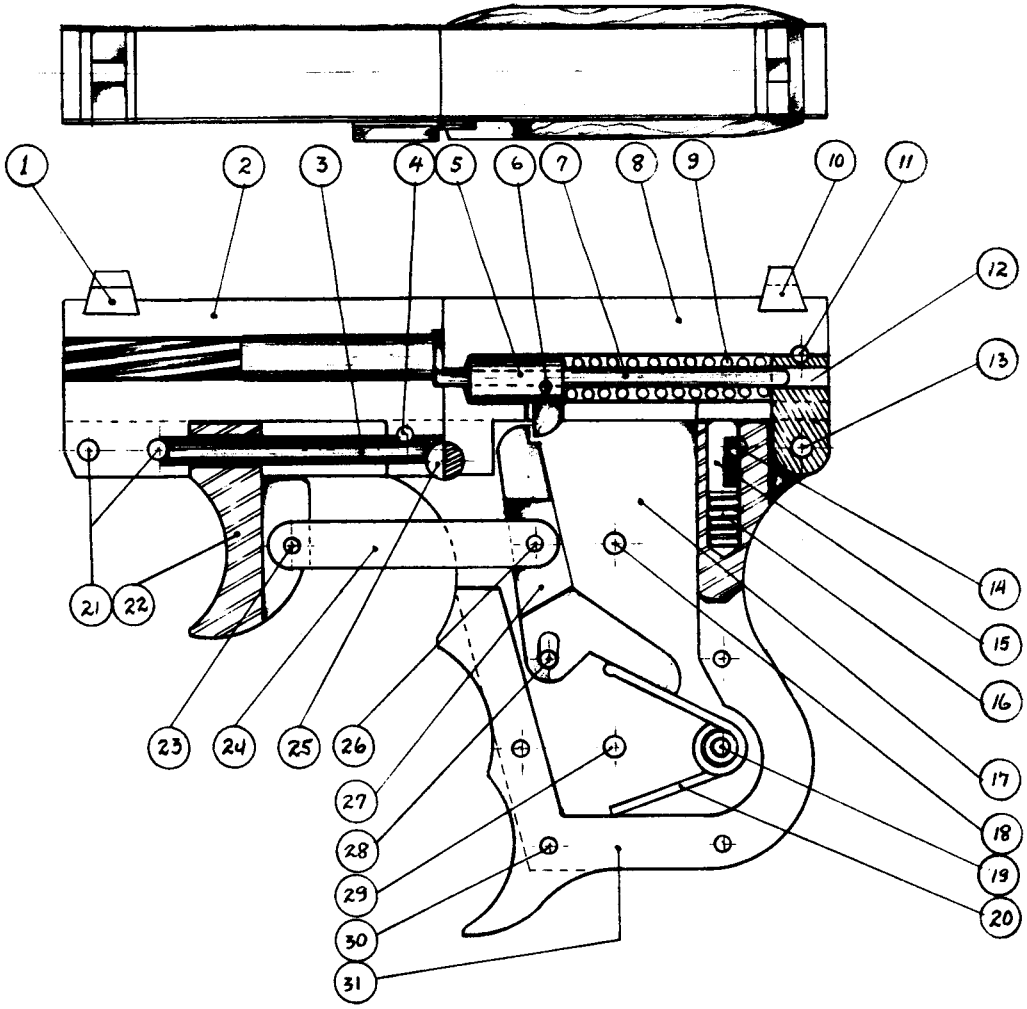


## PARTS LIST

1. *Front sight*
2. *Barrel (1/2 steel plate thick material)*
3. *Trigger travel guide rod*
4. *Guide rod retaining pin*
5. *Firing pin*
6. *Firing pin spring guide retaining pin*
7. *Firing pin spring guide*
8. *Breech block (same material as No. 2)*
9. *Firing pin*
10. *Rear sight*
11. *Firing pin spring plug retaining pin*
12. *Hole for firing pin spring guide travel*
13. *Breech block pivot screw*
14. *Breech block plunger stop pin*
15. *Breech block plunger—pushes breech block automatically once latch was operated to expose barrel for loading.*
16. *Breech block plunger spring*
17. *Receiver/trigger housing (2 pc. steel sheet)*
18. *Grip screw*
19. *Trigger bar hook spring pin*
20. *Trigger bar hook spring*
21. *Barrel connecting screws*
22. *Trigger*
23. *Trigger bar retaining pin*
24. *Trigger bar*
25. *Breech block latch lever pin—secured in place by a locking plate on right side of frame.*
26. *Trigger bar retaining pin*
27. *Firing pin hook*
28. *Firing pin hook pin*
29. *Grip screw*
30. *Rivet (4 prs. securing grip insert to frame)*
31. *Grip insert (1/4 steel plate)*
32. *Breech block latch lever*
33. *Detent ball of latch lever*
34. *Detent ball spring*
35. *Screw nut for #21*
36. *Wood grip (2 prs.)*

*© Copyright 1979 by Paladin Press*

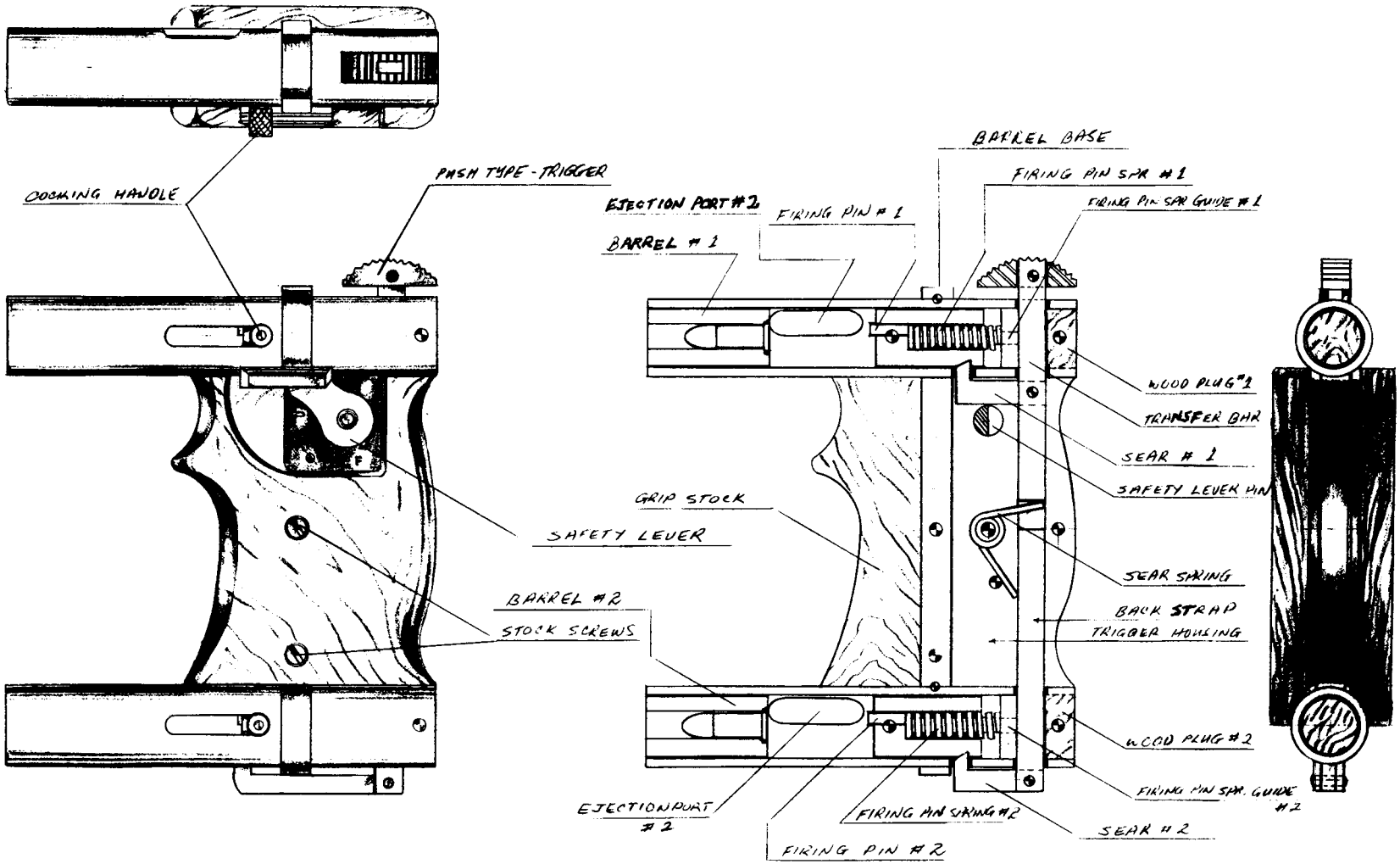


## .22 DOUBLE BARREL SPECIAL WEAPON

© Copyright 1979 by Paladin Press

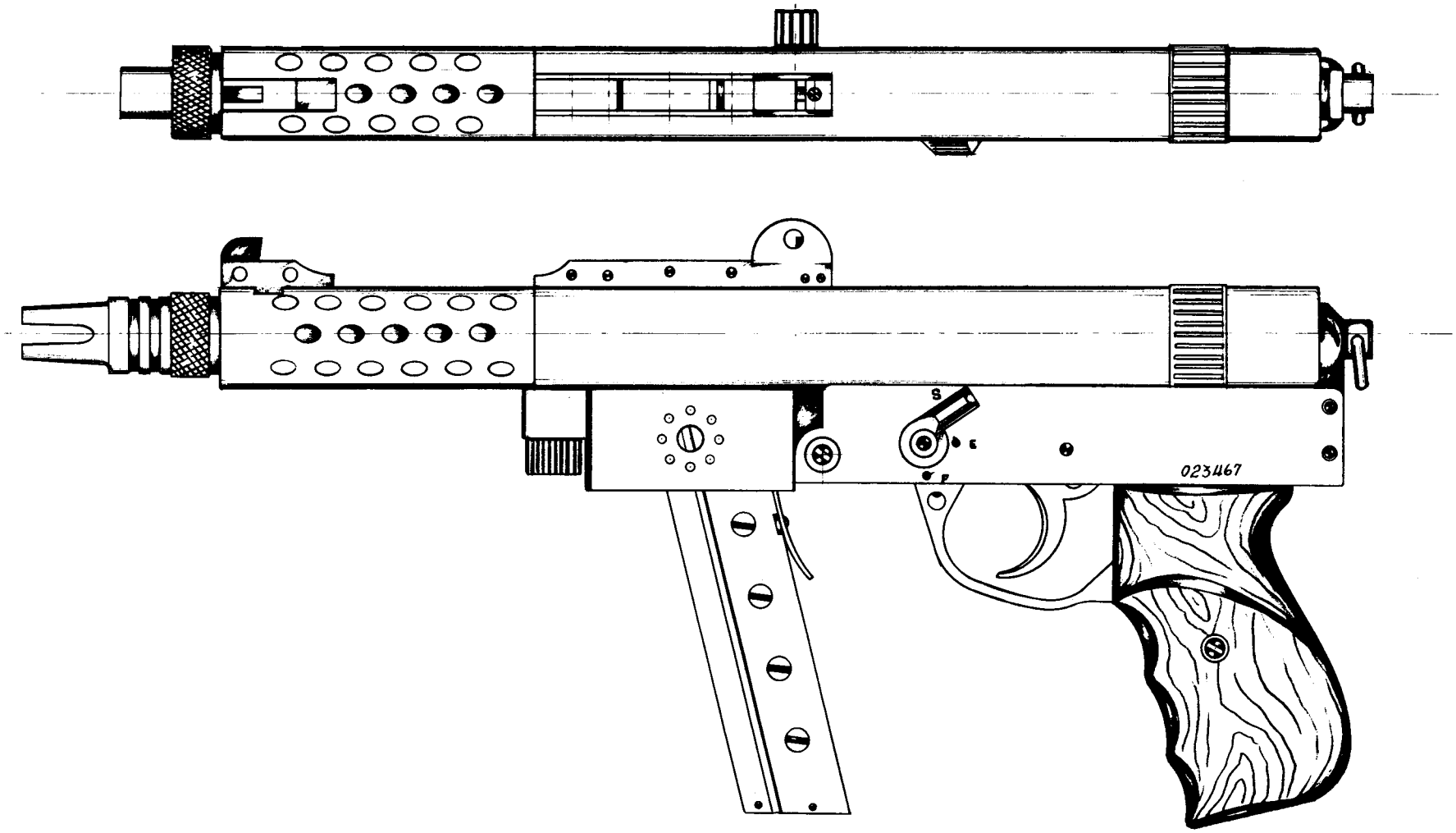


**SQUIRES-BINGHAM MACHINE PISTOL**

© *Copyright 1979 by Paladin Press*

## PARTS LIST

1. *Swivel/screw combination—retaining rear of receiver to grip frame*
2. *Sling swivel*
3. *Grip frame insert retaining pins (insert is best brazed to grip frame)*
4. *Trigger spring*
5. *Screws retaining grip base*
6. *Grip base*
7. *Grip screw*
8. *Grip stock pin*
9. *Grip stock*
10. *Receiver cover*
11. *Recoil spring guide sleeve*
12. *Disconnecting pin of trip*
13. *Screw securing rear of trigger housing to receiver.*
14. *Recoil spring*
15. *Trip*
16. *Hammer spring*
17. *Sear*
18. *Bolt*
19. *Hammer*
20. *Receiver*
21. *Firing pin*
22. *Cocking handle*
23. *Automatic sear assembly housing insert securing pin*
24. *Rear screw connecting auto. sear assy. housing to receiver*
25. *Improvised rear sight*
26. *Automatic sear spring*
27. *Automatic sear*
28. *Automatic sear pin*
29. *Auto. sear trip pin*
30. *Automatic sear trip—operated by bolt before fully closing (bolt distance to chamber mouth)*
31. *Front screw connecting auto. sear housing to receiver*
32. *Front insert securing pins (both front & rear insert can be brazed permanently to automatic sear housing to form a solid unit)*
33. *Improvised front sight*
34. *Safety-selector pin*
35. *Trigger guard screw*
36. *Trip retaining pin*
37. *Ball*
38. *Ball spring*
39. *Trigger pin*
40. *Trigger*
41. *Trigger guard*
42. *Sear pin*
43. *Sear spring securing pin*
44. *Grip frame connecting screw to trigger housing*
45. *Magazine catch screw*
46. *Magazine catch*
47. *Magazine spring*
48. *Magazine body*
49. *Trigger housing front connecting screw*
50. *Perforated barrel jacket (improvised from seamless tubing)*
51. *Barrel jacket nut (brazed to barrel & jacket)*
52. *Barrel*
53. *Muzzle brake (factory original)*
54. *Trigger housing*
55. *Automatic sear assembly housing (removable—secured to receiver by 2 screws)*
56. *Grip frame—formed from steel sheet and encloses the trigger housing unit.*

© Copyright 1979 by Paladin Press

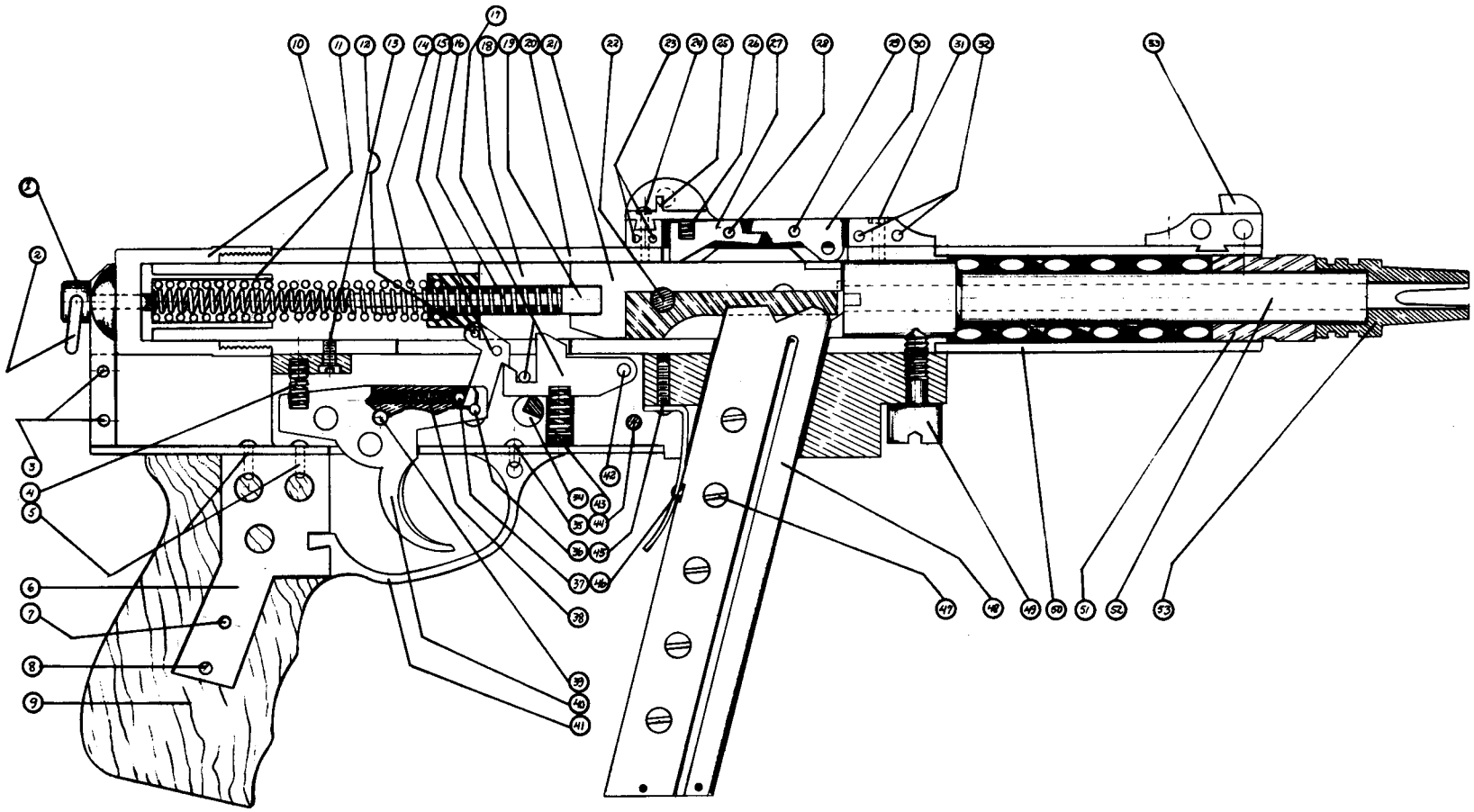

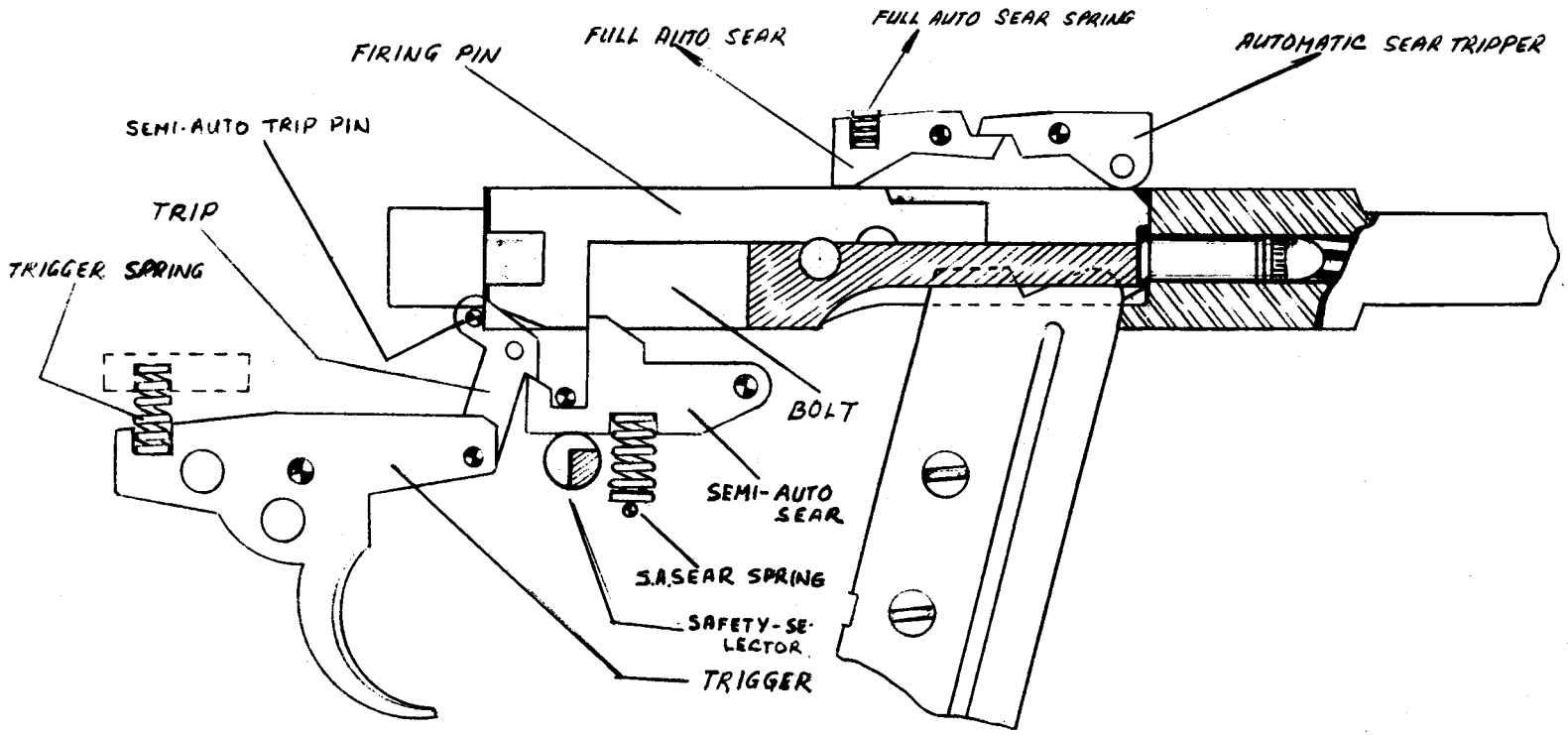


*Selector lever set to semi-auto; firing pin ready to fire cartridge.*

© Copyright 1979 by Paladin Press

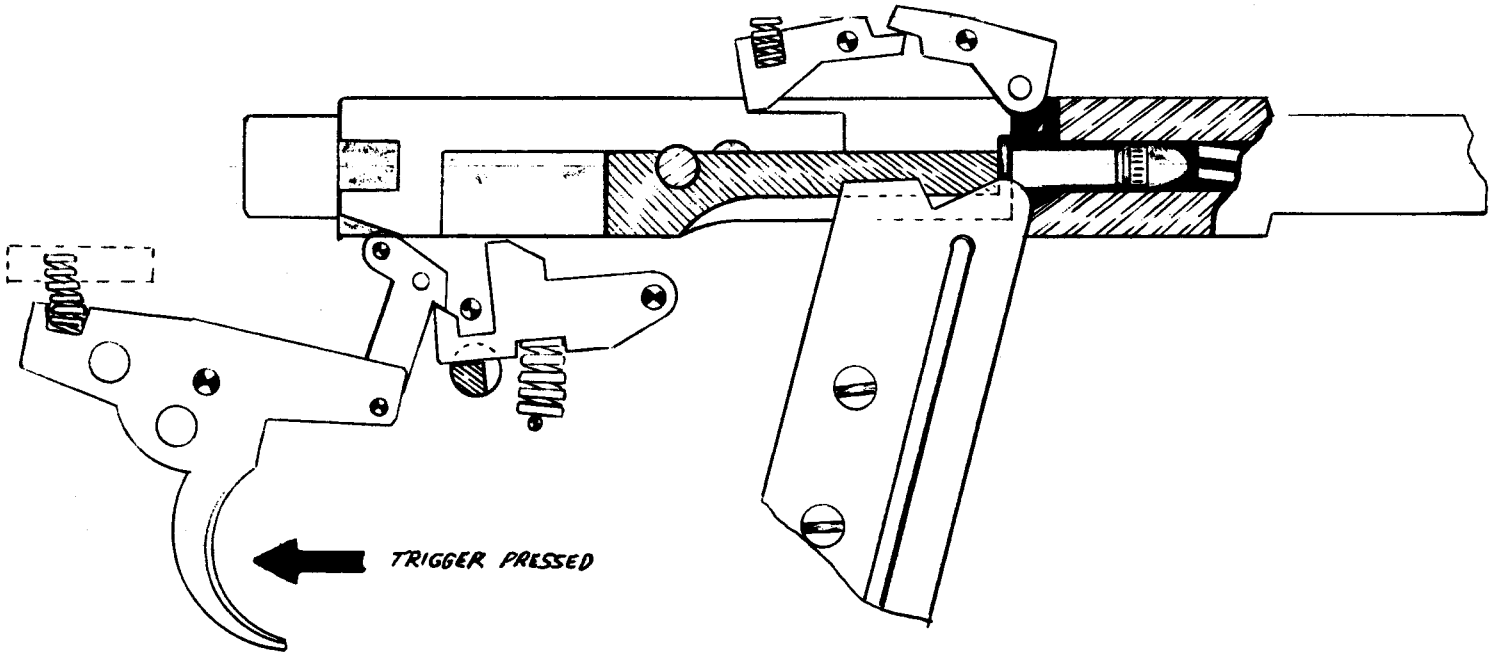


*Selector set to full automatic; trigger pressed, taking semi-auto sear out of engagement with firing pin. Automatic sear will be tripped by front face of bolt when closing.*

© Copyright 1979 by Paladin Press

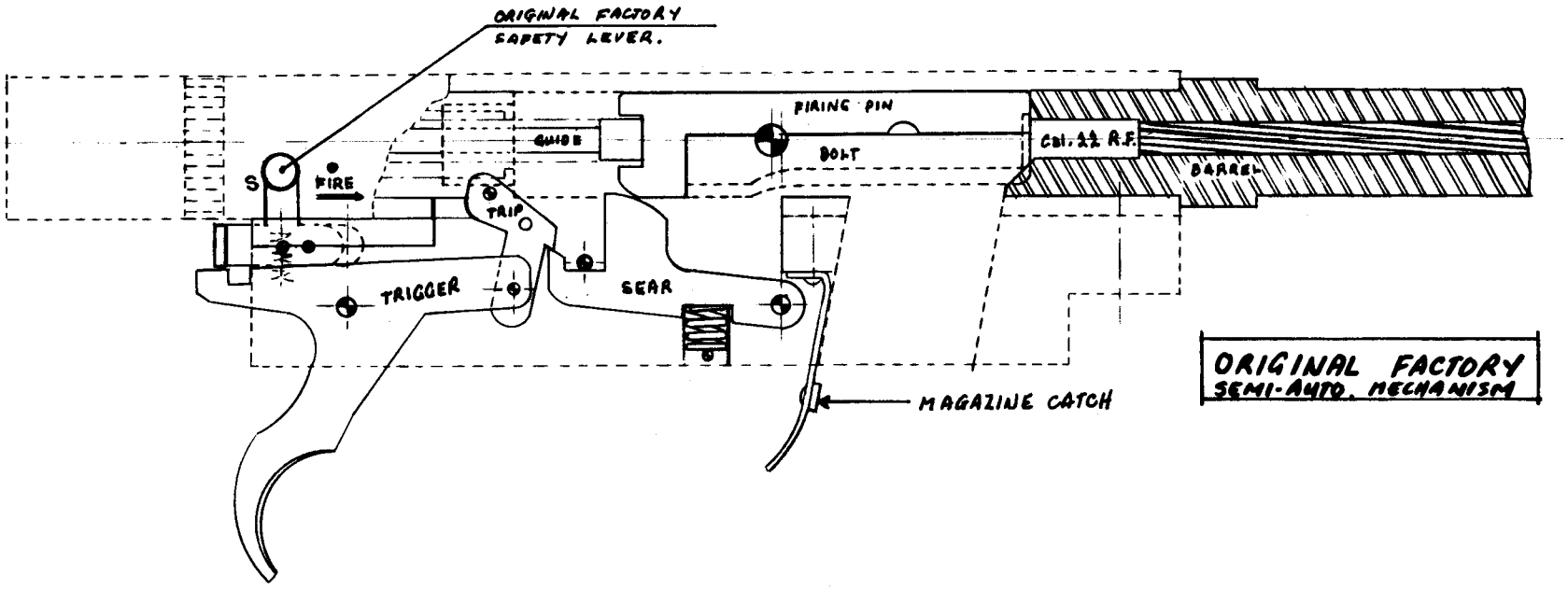


**SQUIRES-BINGHAM M-16 CONVERSION TO SELECTIVE FIRE MODE**

© *Copyright 1979 by Paladin Press*

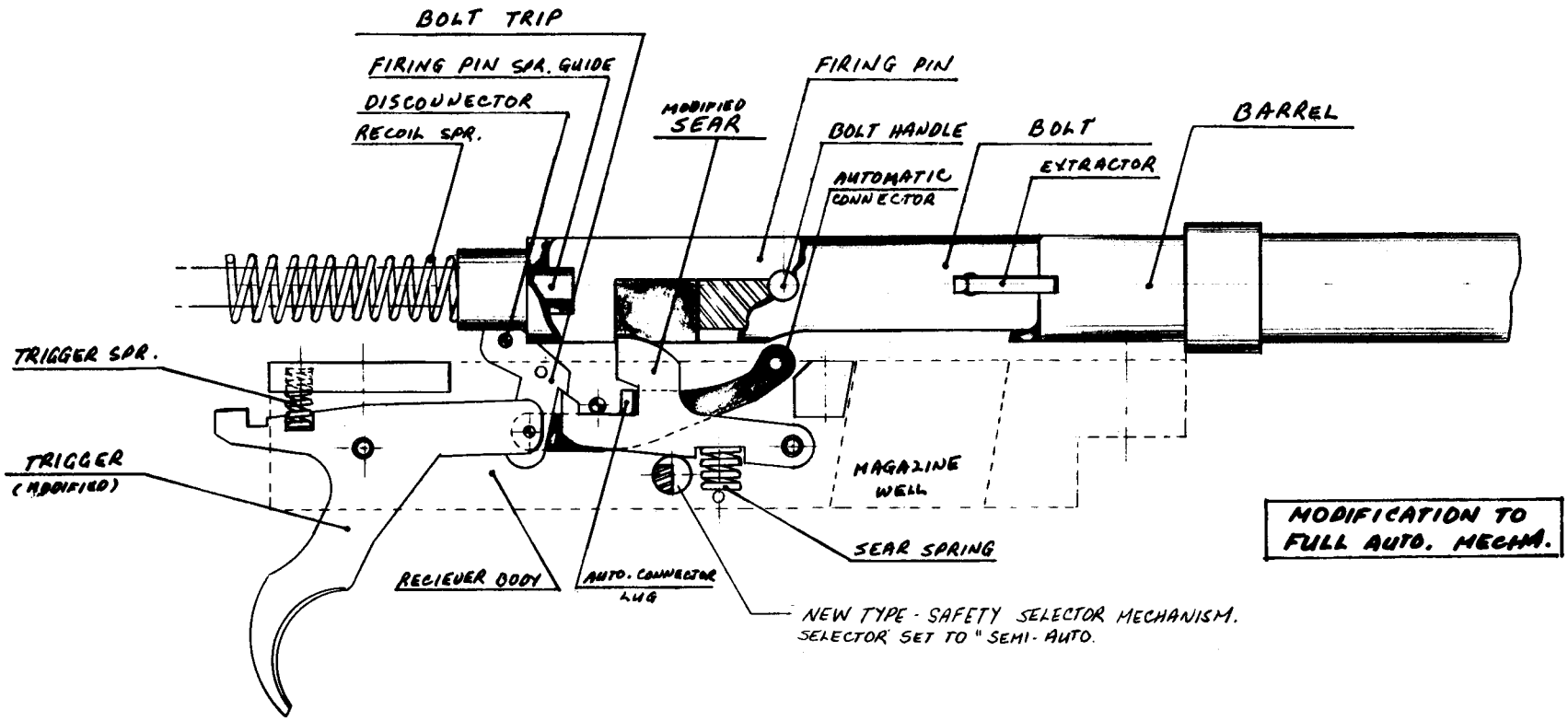


© Copyright 1979 by Paladin Press

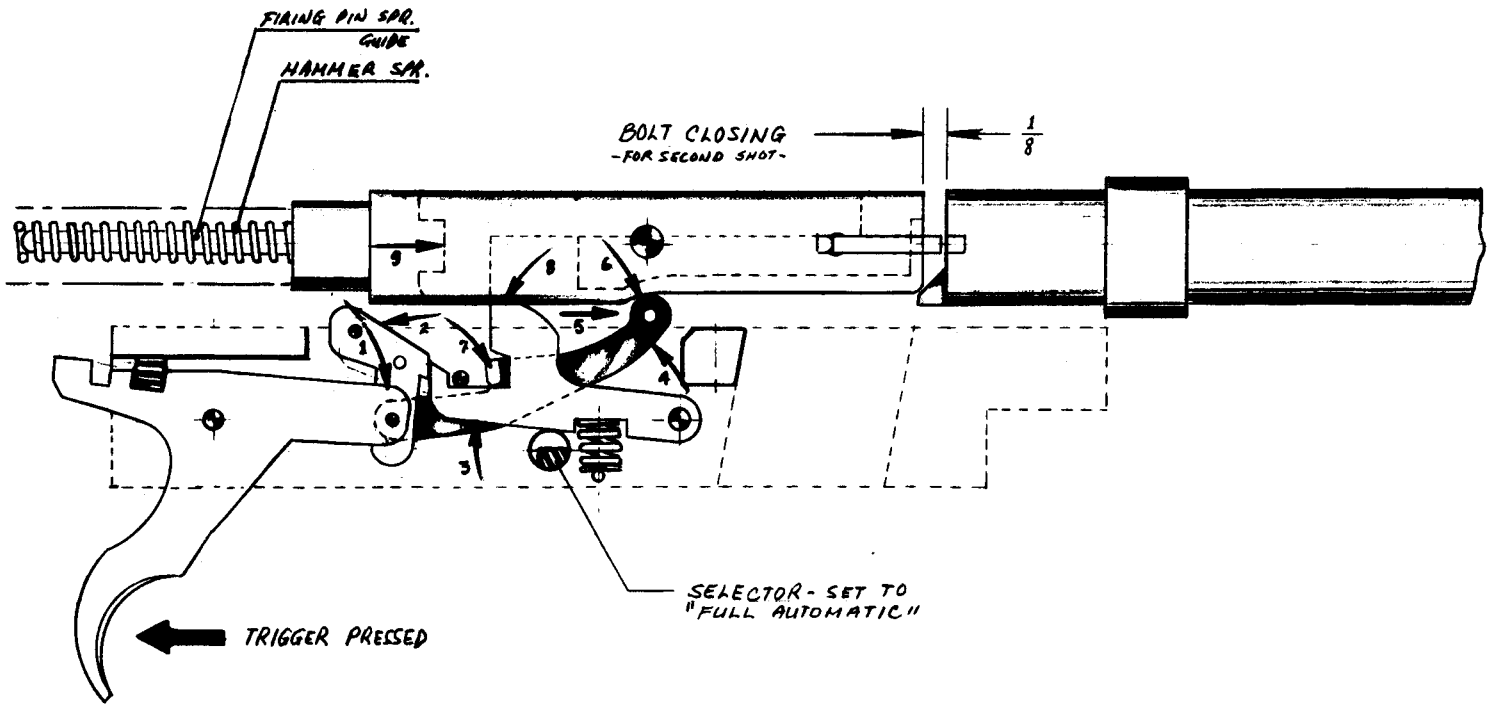


© Copyright 1979 by Paladin Press

# WARNING

**It is against the law to manufacture a firearm without an appropriate license from the federal government. There are also state and local laws prohibiting the possession of such weapons in many areas. Severe penalties are prescribed for violations of these laws. Be warned!**